Weight: 2.0 mg Unit: mm

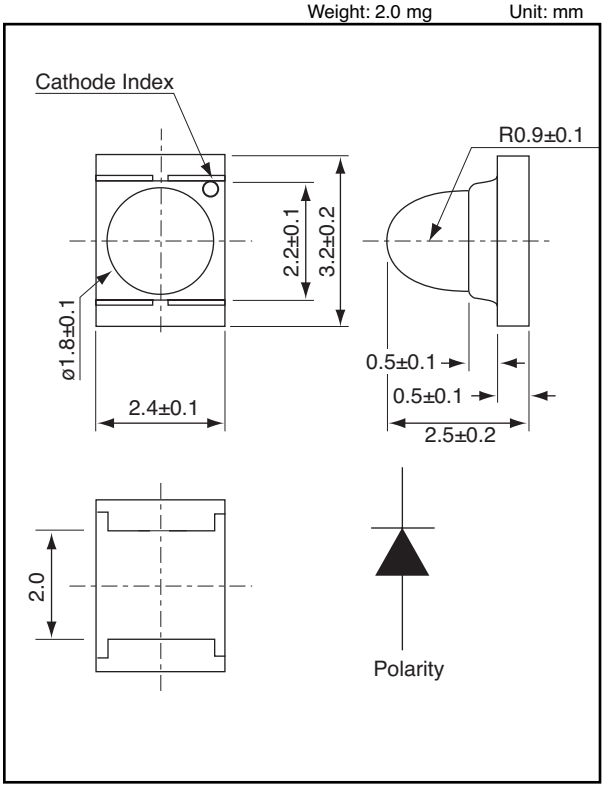

Product specifications contained herein may be changed without prior notice. It is therefore advisable to contact Purdy Electronics before proceeding with the design of equipment incorporating this product.

AND5BB

InGaN Ultra Bright Blue Light Emission Surface Mount Package

Features

- **RoHS Compliant**
- Small package size (12mm tape on 7" diameter reel)
- Compatible with automatic placement equipment
- Compatible with infrared & vapor phase reflow solder process
- Mono-color type

Maximum Ratings (T_a = 25°C)

Characteristics	Symbol	Rating	Unit
Forward Current	I_F	30	mA
Reverse Voltage	V_R	5	V
Power Dissipation	P_D	120	mW
Operating Temperature Range	T_{Opr}	-20 to 80	°C
Storage Temperature Range	T_{Stg}	-30 to 90	°C

Electro-Optical Characteristics (T_a = 25°C)

Characteristics	Symbol	Test Condition	Minimum	Typical	Maximum	Unit
Forward Voltage	V_F	I_F = 20 mA	–	3.5	4.0	V
Reverse Current	I_R	V_R = 5 V	–	–	10	µA
Luminous Intensity	I_V	I_F = 20 mA	118	150	–	mcd
Peak Emission Wavelength	I_P	I_F = 20 mA	–	468	–	nm
Spectral Line Half Width	ΔI	I_F = 20 mA	–	40	–	nm
Dominant Wavelength	Id	I_F = 20 mA	–	470	–	nm
Full Viewing Angle	θ	I_V = 1/2 Peak	–	30	–	degree

Precaution

Please be careful of the following:
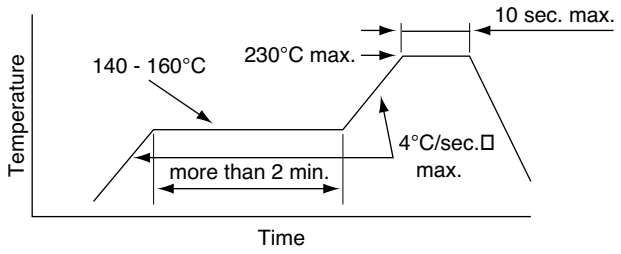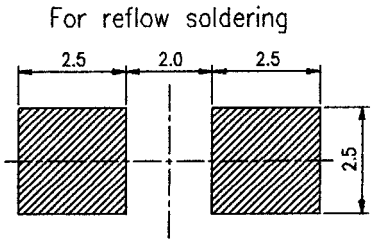
1. Manual soldering: maximum temperature of iron tip: 260°C max.
   Soldering time: within 5 sec. per solder-land
   Soldering portion of lead: up to 1.6 mm from the body of the device
2. Reflow solder: recommended condition is as follows:
3. Absolute secure counter measures against static electricity and surge should be taken when handling these products. It is recommended to use wrist band or antistatic gloves when handling these LEDs.